9 Installing the BTS3012 Cables

About This Chapter

This task describes how to install the BTS3012 cables. The cables are classified into power cables, PGND cables, Busbar power cables, E1 cables, and signal cables.

9.1 List of the BTS3012 cables
This part describes the BTS3012 cables. These cables include power cables, PGND cables, transmission cables, signal cables, and RF signal cables.

9.2 Cabling Specifications for the BTS
This part describes the cabling specifications for the BTS. The power cables and signal cables for the BTS must be routed in compliance with specified requirements to avoid electromagnetic interference to the signals.

9.3 Installing the Busbar Power Cables of the BTS3012
This task describes how to install the Busbar power cables of the BTS3012.

9.4 Installing the BTS3012 Transmission Cables
This task describes how to install the BTS3012 transmission cables.

9.5 Installing the BTS3012 RF Cables
This task describes how to install the BTS3012 RF cables.

9.6 Installing the BTS3012 Signal Cables
This task describes how to install the BTS3012 signal cables.

9.7 Installing the Cables Between the Sidepower and the BTS3012
This task describes how to install the alarm cable and the power cable between the Sidepower and the BTS3012.

9.8 Installing the Cables Between the EMU and the BTS3012
This task describes how to install the alarm cable between the EMU and the BTS3012.

9.9 Installing the Cables Between the EAC-2 and the BTS3012
This task describes how to install the cables between the EAC-2 and the BTS3012.

9.1 List of the BTS3012 cables

This part describes the BTS3012 cables. These cables include power cables, PGND cables, transmission cables, signal cables, and RF signal cables.

Table 9-1 lists the BTS3012 cables.

Table 9-1 List of the BTS3012 cables

Item	Sub-Item	Installation Positions	Factory Settings
DC power cable	**External input power cable**	One end connects to the terminals labeled -48V and GND on the power input terminal socket, which is located on top of the cabinet. The other end connects to the power distribution device provided by the operator.	Both ends of the cable should be made on site. For details, refer to **7.1 Installing the BTS3012 Power Cables**.
	Power cable between the DC lightning arrester and the power input terminal socket	One end connects to the terminals labeled -48V and GND on the power input terminal socket, which is located on top of the cabinet. The other end connects to the terminals labeled V– and V+ on the DC lightning arrester on top of the cabinet.	Both ends of the cable are connected before delivery.
	Power cable from the top of the cabinet to the Busbar	One end connects to the terminals labeled -48V and GND on the power input terminal socket, which is located on top of the cabinet. The other end connects to the terminals labeled -48 V and PGND on the power input terminal socket, which is located on Busbar.	Both ends of the cable are connected before delivery.
PGND cables	**PGND cable for the external power input**	One end connects to the PGND bar provided by the operator. The other end connects to the PGND bar on top of the cabinet.	Both ends of the cable should be made on site. For details, refer to **7.2 Installing the BTS3012 PGND Cables**.

Item	Sub-Item	Installation Positions	Factory Settings
	PGND cable between the DC lightning arrester and the PGND bar	One end connects to the PGND bar on top of the cabinet. The other end connects to the terminal labeled GND on the DC lightning arrester, which is located on top of the cabinet.	
Equipotential cable	**Equipotential cable**	One end connects to the PGND bar on top of one cabinet. The other end connects to the PGND bar on top of the other cabinet.	Both ends of the cable should be made on site. For details, refer to **7.3 Installing the BTS3012 Equipotential Cables**.
Busbar power cable	**Power cable between the Busbar and the DAFU subrack**	One end connects to the first port on the Busbar, which is located at the right of the cabinet. The other end connects to the PWR port on the DDPU panel or the DC-IN-48V port on the DFCU panel.	One end of the cable connects to the Busbar before delivery. The other end of the cable should be connected on site. For details, refer to **9.3.3 Installing the Power Cables from the BTS3012 Busbar to the DAFU Subrack**.
	Power cable between the Busbar and the DTRU	One end connects to the corresponding port on the Busbar, which is located at the right of the cabinet. The other end connects to the PWR port on the DTRU panel.	One end of the cable connects to the Busbar before delivery. The other end of the cable should be connected on site. For details, refer to **9.3.1 Installing the Power Cables from the BTS3012 Busbar to the Common Subrack and DTRU Subrack**.
	Power cable between the Busbar and the fan subrack	One end connects to the eighth port on the Busbar, which is located at the right of the cabinet. The other end connects to the PWR port on the FAN subrack.	One end of the cable connects to the Busbar before delivery. The other end of the cable should be connected on site. For details, refer to **9.3.2 Installing the Power Cables from the BTS3012 Busbar to the Fan Subrack**.

Item	Sub-Item	Installation Positions	Factory Settings
	Power cable between the Busbar and the common subrack	One end connects to the ninth port on the Busbar, which is located at the right of the cabinet. The other end connects to the POWER port on the DCCU panel.	One end of the cable connects to the Busbar before delivery. The other end of the cable should be connected on site. For details, refer to **9.3.1 Installing the Power Cables from the BTS3012 Busbar to the Common Subrack and DTRU Subrack**.
Transmission cables	**75-ohm E1 cable**	One end connects to the transmission device provided by the operator. The other end connects to the TR port on the DELC panel.	Both ends of the cable should be made on site. For details, refer to **9.4.1 Installing the BTS3012 E1 Cables**.
	120-ohm E1 cable	The installation of the 120-ohm E1 cable is the same with that of the 75-ohm E1 cable.	
	Ethernet cable	One end connects to the MMI port on the DTMU panel. The other end connects to the HUB. Otherwise, one end connects to the Ethernet port on the LMT PC and the other end connects to the HUB. The crossover cable connects the MMI port on the DTMU panel with the Ethernet port on the LMT PC to set up a communication link between the DTMU and the LMT PC.	The Ethernet cable is connected on site during the maintenance.
	E1 signal transfer cable	One end connects to the TRAN port on the DCCU panel. The other end connects to the DCTB, which is located in the set-on-top subrack.	Both ends of the cable are connected before delivery.

Item	Sub-Item	Installation Positions	Factory Settings
	Optical cable	One end connects to the transmission device (such as the ODF) provided by the operator. The other end connects to the optical transmission equipment through the cabling hole on top of the cabinet.	Both ends of the cable should be made on site. For details, refer to **9.4.2 Installing the BTS3012 Optical Cables**.
Signal cables	**Lightning protection failure alarm cable**	One end connects to the ports labeled Alarm and GND on the DC lightning protection arrester, which is located on top of the cabinet. The other end, 2-pin phoenix terminal, connects to the S1+S1– or S2+S2– port on the DSAC, which is located on top of the cabinet.	One end of the cable is connected with the DC lightning protection arrester before delivery. The other end of the cable should be made on site. For details, refer to **9.6.6 Installing the Lightning Protection Failure Alarm Cables of the BTS3012**.
	Lightning protection failure alarm cable for the combined cabinets	One end connects to the S2 +S2- port on the DSAC panel of the main cabinet. The other end connects to the S1+S1- port on the DSAC panel of the extension cabinet.	Both ends of the cable should be made on site. For details, refer to **9.6.7 Installing the Lightning Protection Failure Alarm Cables for the Combined Cabinets**.
	Power detection cable	One end connects to the PF out/PR out port on the DFCU panel. The other end connects to the PF in/PR in port on the DFCU panel.	Both ends of the cable are connected before delivery.
	Four-in-one short-circuiting signal cable	One end connects to the COM port on the DFCU panel. The other end connects to the TX-DUP port on the DFCU panel.	Both ends of the cable are connected before delivery.
	Diversity receive short-circuiting cable	One end connects to the RXD-OUT port on the DFCU panel. The other end connects to the HL-IN port on the DFCU panel.	Both ends of the cable are connected before delivery.

Item	Sub-Item	Installation Positions	Factory Settings
	Combining short-circuiting signal cable	One end connects to the TX1 or TX2 port on the DTRU panel. The other end connects to the IN1 or IN2 port on the DTRU panel.	Both ends of the cable should be made on site. For details, refer to **9.6.1 Installing the Combining Short-Circuiting Signal Cables of the BTS3012/ BTS3012AE**.
	Signal cable for combined cabinets	One end connects to the DCF port on top of the BTS3012 cabinet. The other end connects to the port for combined cabinets on the other cabinet.	Both ends of the cable should be made on site. For details, refer to **9.6.15 Installing the Signal Cables for Combined Cabinets**.
	Signal cable for cabinet groups	One end connects to the CKB1 or CKB2 port on top of the BTS3012 cabinet. The other end connects to the port for cabinet groups on the other cabinet.	Both ends of the cable should be made on site. For details, refer to **9.6.16 Installing the Signal Cables for Cabinet Groups**.
	Signal cable for the hybrid group	One end connects to the CKB1 or CKB2 port on top of the BTS3012 cabinet. The other end connects to the CKB1 or CKB2 port on top of the BTS312 cabinet.	Both ends of the cable should be made on site. For details, refer to **9.6.17 Installing the Signal Cables for the Combined Group of the BTS3012 and BTS312**.
	Boolean value output cable	One end connects to the corresponding external device. The other end connects to the SWOUT port on the DMLC, which is located on top of the cabinet.	Both ends of the cable should be made on site. For details, refer to **9.6.9 Installing the Boolean Output Cables of the BTS3012**.
	EAC signal cable	One end connects to the EAC port on the DSAC, which is located on top of the cabinet. The other end connects to the corresponding external device.	Both ends of the cable should be made on site. For details, refer to **9.6.10 Installing the EAC Signal Cables of the BTS3012**.

Item	Sub-Item	Installation Positions	Factory Settings
	Boolean input signal cable	One end connects to the corresponding external device. The other end connects to the SWIN port on the DMLC, which is located on top of the cabinet.	Both ends of the cable should be made on site. For details, refer to **9.6.8 Installing the Boolean Input Cables of the BTS3012**.
	Dedicated monitoring signal cable	One end connects to the DDF. The other end connects to the AIN port on the DMLC, which is located on top of the cabinet.	Both ends of the cable should be made on site. For details, refer to **9.6.11 Installing the Dedicated Monitoring Signal Cable of the BTS3012**.
	Signal transfer cable for combined cabinets	One end connects to the TO SLAVE–MASTER (FROM DCSU) port on the DCTB. The other end connects to the CC_IN or CC_OUT port on the DCSU.	Both ends of the cable are connected before delivery.
	Signal cable for the environment monitoring device	One end connects to the environment monitoring device. The other end connects to the COM1 or COM2 port on the DSAC, which is located on top of the cabinet.	Both ends of the cable should be made on site. For details, refer to **9.6.12 Installing the EMI Signal Cables of the BTS3012**.
	RET control signal cable	One end connects to the SMA port on the DATU panel. The other end connects to the SMA port on the Bias Tee.	Both ends of the cable should be made on site. For details, refer to **9.6.13 Installing the RET Control Signal Cables of the BTS3012**.
	Signal cable between the DCTB and the DAFU subrack	One end connects to the DCTB. The three ports at the other end connect to the COM/ ONSHELL/DBUS ports on the DDPU/DCOM/DFCU.	One end of the cable is connected with the DCTB before delivery. The other end of the cable should be made on site. For details, refer to **9.6.14 Installing the Signal Cables Between the DCTB and the DAFU Subrack for the BTS3012**.

Item	Sub-Item	Installation Positions	Factory Settings
	TOP signal cable between the DCCU/DSCU and the DCTB	Two ports at one end of the cable connect to the TO_TOP1 port on the DCCU and the TOP2 port on the DCSU. The other end connects to the DCTB, which is located in the set-on-top subrack.	Both ends of the cable are connected before delivery.
	Signal cable between the DCSU and the DTRB	One end connects to the TO_DTRB port on the DCSU. The other end connects to the corresponding port on the DTRB.	Both ends of the cable are connected before delivery.
	Boolean signal transfer cable	One end connects to the IN port on the DEMU panel. The other end connects to the DCTB, which is located in the set-on-top subrack.	Both ends of the cable are connected before delivery.
	Signal cable between the DFCB and the DFCU	One end connects to the COM1 or COM2 port on the DFCB panel. The other end connects to the COM-IN port on the DFCU panel.	Both ends of the cable should be made on site. For details, refer to **9.6.3 Installing the BTS3012/ BTS3012AE Signal Cables Between the DFCB and the DFCU**.
	Signal transfer cable for the fan subrack	One end connects to the To_FAN port on the DCCU panel. The two ports at the other end connect to the COM port on the FAN subrack and the temperature sensor port at the air inlet at the bottom of the cabinet.	Both ends of the cable are connected before delivery.

Item	Sub-Item	Installation Positions	Factory Settings
RF cables	**RF RX/TX signal cables between the DTRU and the DDPU/DFCU**	Consists of the RF TX signal cable and RF RX signal cable One end of the RF TX signal cable connects to the TX port on the DTRU panel. The other end connects to the TX port on the DDPU/DFCU panel. One end of the RF RX signal cable connects to the RX port on the DTRU panel. The other end connects to the RX port on the DDPU/DFCU panel.	Both ends of the cable should be made on site. For details, refer to **9.5.1 Installing the BTS3012/BTS3012AE RF Signal Cables**.
	Indoor 1/2-inch jumper	One end connects to the feeder, which is connected with the antenna. The other end connects to the ANTA or ANTB port on the DDPU or DFCU.	Both ends of the cable should be made on site. For details, refer to **9.5.2 Installing the Indoor 1/2-Inch Jumpers of the BTS3012**.

NOTE

- The combining short-circuiting signal cable is not required when the DTRU (type B) is used. The combining short-circuiting signal cable is used only for the internal combining of the DTRU (type A).
- Place the removed dustproof caps under the cabinet for future use.

9.2 Cabling Specifications for the BTS

This part describes the cabling specifications for the BTS. The power cables and signal cables for the BTS must be routed in compliance with specified requirements to avoid electromagnetic interference to the signals.

Requirements for Cables of General Use

Bending radius of the cables must meet the following requirements:

- The bending radius of the power cable or PGND cable must be 20 times greater than the diameter of the cable.
- The bending radius of the optical cable must be 20 times greater than the diameter of the optical cable.
- The bending radius of the E1/T1 cable must be 20 times greater than the diameter of the cable.
- The bending radius of the signal cable must be 20 times greater than the diameter of the cable.

The cables must be bundled as follows:

- Cables of different types must be routed separately. The cables cannot be coiled.
- The cables should be tightly bundled in neat appearance. Ensure that the jackets of the cables are not damaged.
- The cable ties should face the same direction. The cable ties at the same horizontal line should be on the straight line. Extra length of cable ties should be cut off.
- Labels or nameplates must be attached or bundled on the cables after the cables are installed.

The cables must be routed in category as follows:

- Cables of different types must be routed separately.
- Cables of different types cannot be cross-routed.
- Space between cables of different types must be greater than 30 mm or separated by specified objects when the cables are routed in parallel.

Requirements for Cables of Specific Use

The requirements for routing the power cables are as follows:

- The -48 V power cable and the DC grounding cable should be bundled together.
- The power cables must be routed separately from the other cables.
- Bundle the power cables before they are routed.
- Positions for routing the power cables should meet requirements specified in the engineering design.
- If the power cable is not long enough when you are routing it, replace it with a new one that is long enough. Do not add a connector or solder a new one to that cable.

The requirements for routing the PGND cables are as follows:

- The PGND cables and DC grounding cables must be connected to
- The PGND cables must be buried in the ground or routed indoors. The PGND cables cannot be routed overhead before they are led in to the equipment room.
- The cross-sectional area of the grounding cable between the cabinet and the lightning protection unit must be greater than 50 mm^2.
- The external conductor of the coaxial cable and both ends of the shielding layer on the shielding cable must be in proper electrical contact with the outer surface of the metallic casing of the connected equipment.
- The grounding lead-in and the signal cable cannot be bundled together or coiled. A certain distance should be reserved to avoid mutual interference.
- Adding fuses or switches on the PGND cables is forbidden.
- Other devices cannot be part of electrical connection for the grounding cables.
- All the accessible conductive metallic parts in the casing of the equipment must be in reliable connection with the protection grounding terminal.

The requirements for routing the E1 cables are as follows:

- The E1 cables cannot be cross-routed with the power cables, PGND cables, or RF cables. If the transmission cables are routed in parallel with the power cables, PGND cables, or RF cables, the space between the cables of different types must be greater than 30 mm.
- The E1 cables should be tightly bundled with cable ties and be routed in neat appearance.

- A slack of E1 cables should be reserved at the turnings.

The requirements for routing the optical cables are as follows:

- Do not stretch out the optical cables violently, step on the cables, or place heavy objects on the cables. Keep the cables away from sharp objects lest they be damaged.
- The PVC corrugated tubes must be applied to the optical cables for protection purpose before the cables are routed.
- Extra optical cables should be coiled on the specified device such as the fiber coiler.
- Use moderate force to coil the optical cables. Do not bend the cables forcibly lest they be damaged.

9.3 Installing the Busbar Power Cables of the BTS3012

This task describes how to install the Busbar power cables of the BTS3012.

9.3.1 Installing the Power Cables from the BTS3012 Busbar to the Common Subrack and DTRU Subrack
This task describes how to install the power cables from the Busbar to the common subrack and DTRU subrack. The cables are used to lead power to the two subracks and to provide power for the boards in the subracks.

9.3.2 Installing the Power Cables from the BTS3012 Busbar to the Fan Subrack
This task describes how to install the power cables from the BTS3012 Busbar to the fan subrack. The cables are used to lead power to the fan subrack and to provide power for the fans in the subrack.

9.3.3 Installing the Power Cables from the BTS3012 Busbar to the DAFU Subrack
This task describes how to install the power cables from the BTS3012 Busbar to the DAFU subrack. The cables are used to lead power into the DAFU subrack and to provide power for the DDPU or DFCU in the subrack.

9.3.1 Installing the Power Cables from the BTS3012 Busbar to the Common Subrack and DTRU Subrack

This task describes how to install the power cables from the Busbar to the common subrack and DTRU subrack. The cables are used to lead power to the two subracks and to provide power for the boards in the subracks.

Procedure

Step 1 Connect the power cable between the BTS3012 Busbar and the common subrack to the POWER port on the DCCU by referring to **Figure 9-1**.

Figure 9-1 Cabling of power cables connected to boards and subracks

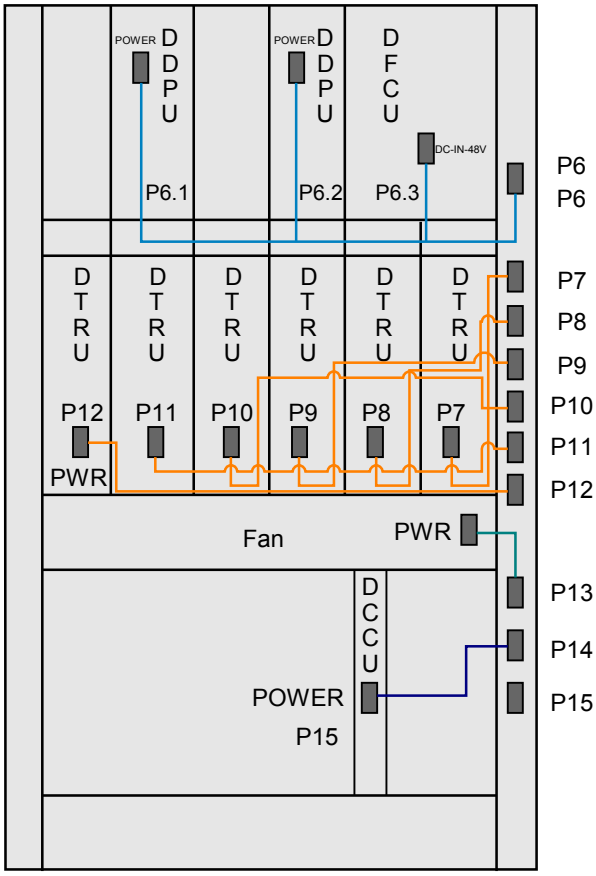

Step 2 Connect the power cables between the BTS3012 Busbar and the DTRU subrack to the PWR port on the DTRU by referring to **Figure 9-1**.

Step 3 Attach labels to the power cables from the BTS3012 Busbar to the common subrack and DTRU subrack by referring to **Labeling Power Cables**.

----End

9.3.2 Installing the Power Cables from the BTS3012 Busbar to the Fan Subrack

This task describes how to install the power cables from the BTS3012 Busbar to the fan subrack. The cables are used to lead power to the fan subrack and to provide power for the fans in the subrack.

Procedure

Step 1 Connect the power cable between the BTS3012 Busbar and the fan subrack to the PWR port on the panel of the subrack by referring to **Figure 9-2**.

Figure 9-2 Cabling of power cables connected to boards and subracks

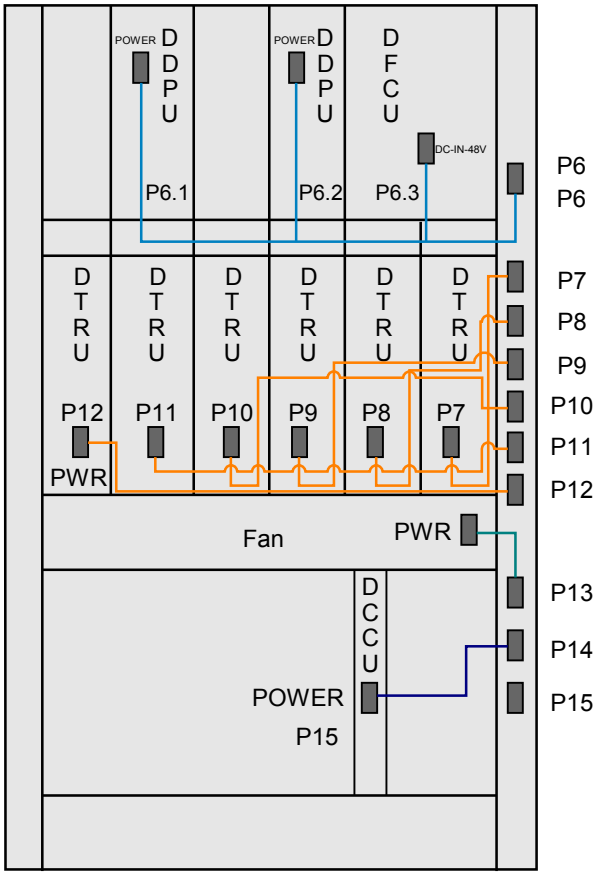

Step 2 Attach labels to the power cables between the BTS3012 Busbar and the fan subrack by referring to **Labeling Power Cables**.

----End

9.3.3 Installing the Power Cables from the BTS3012 Busbar to the DAFU Subrack

This task describes how to install the power cables from the BTS3012 Busbar to the DAFU subrack. The cables are used to lead power into the DAFU subrack and to provide power for the DDPU or DFCU in the subrack.

Procedure

Step 1 Connect the power cables between the BTS3012 Busbar and the DAFU subrack to the POWER port on the DDPU or to the DC-IN-48V port on the DFCU by referring to **Figure 9-3**.

Figure 9-3 Cabling of power cables connected to boards and subracks

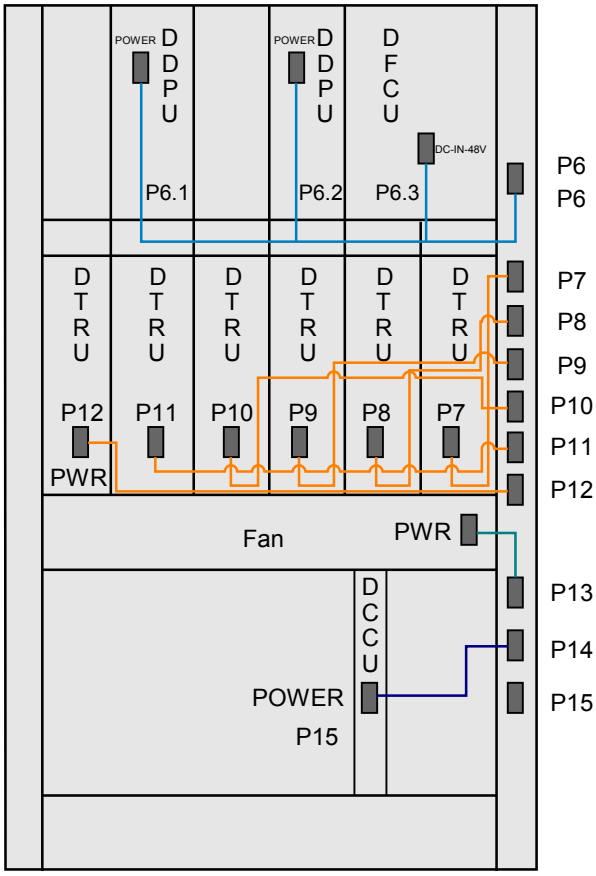

Step 2 Attach labels to the power cables between the BTS3012 Busbar and the fan subrack by referring to **Labeling Power Cables**.

----End

9.4 Installing the BTS3012 Transmission Cables

This task describes how to install the BTS3012 transmission cables.

9.4.1 Installing the BTS3012 E1 Cables
This task describes how to install the BTS3012 E1 cables. The BTS3012 E1 cables are used to transmit signals on the Abis interface.

9.4.2 Installing the BTS3012 Optical Cables
This task describes how to install the BTS3012 optical cables. The BTS3012 optical cables are used to transmit signals on the Abis interface.

9.4.1 Installing the BTS3012 E1 Cables

This task describes how to install the BTS3012 E1 cables. The BTS3012 E1 cables are used to transmit signals on the Abis interface.

Context

The principles for connecting the E1 cables between the BTS3012 and the peer end are as follows:

- The TX wire of the E1 cable on the BTS3012 end must be connected to the RX wire of the E1 cable on the peer end.
- The RX wire of the E1 cable on the BTS3012 end must be connected to the TX wire of the E1 cable on the peer end.
- The mapping between the E1 cables on the BTS3012 end and the E1 cables on the peer end must be determined based on the data configurations.
- If one end for connection is a 75-ohm coaxial cable and the other end is a 120-ohm twisted pair cable, an adapter or a tieline must be used to perform impedance conversion.

Procedure

Step 1 Insert the DB25 male connector of the E1 cable into the DB25 female socket on the DELC at the top of the cabinet.

Step 2 Tighten the two fastening screws on the connector.

Step 3 Route the cable along the cable rack and obtain the cable of an appropriate length based on the actual situation.

Step 4 Make the corresponding cable connectors, such as the SMB connector, based on the transmission equipment.

Step 5 Connect the made connectors to the corresponding wiring terminals on the distribution frame.

Step 6 Attach labels to the E1 cables by referring to **Labeling Signal Cables**.

----End

9.4.2 Installing the BTS3012 Optical Cables

This task describes how to install the BTS3012 optical cables. The BTS3012 optical cables are used to transmit signals on the Abis interface.

Context

NOTE

When the BTS3012 is configured with optical transmission equipment, you need to connect the optical cables.

Procedure

Step 1 Choose optical cables of appropriate length based on the actual situation.

Step 2 Attach temporary labels to the optical cables for distinguishing purpose. The contents of the temporary labels can be consistent with the contents of the formal labels or can be decided by yourself.

Step 3 Cover the optical cables with PVC corrugated tubes.

NOTE

- Place the optical cables on a slope, and then coat the cables with PVC corrugated tubes.
- Do not cut corrugated tubes at random because exposed cables may be damaged.
- If you need to cut the corrugated tubes, cover the cut portion with insulation tapes to protect the fibers from being damaged by sharp objects.

Step 4 Route the optical cables by referring to **9.2 Cabling Specifications for the BTS**.

Step 5 Remove the protective caps from the connectors.

Step 6 Align the LC connector with the optical transmission equipment in the transmission subrack and insert the connector until you hear a clicking sound.

Step 7 Use cable ties to bind the optical cables to the cable trough and cable rack.

Step 8 Remove the temporary labels on both ends of the optical cables. Attach labels to the cables by referring to **Labeling Signal Cables**.

----End

9.5 Installing the BTS3012 RF Cables

This task describes how to install the BTS3012 RF cables.

9.5.1 Installing the BTS3012/BTS3012AE RF Signal Cables
This task describes how to install the RF signal cables of the BTS3012/BTS3012AE. The cables consist of the RF RX signal cable and the RF TX signal cable.

9.5.2 Installing the Indoor 1/2-Inch Jumpers of the BTS3012
This task describes how to install the jumpers between the feeder and the BTS3012 cabinet.

9.5.1 Installing the BTS3012/BTS3012AE RF Signal Cables

This task describes how to install the RF signal cables of the BTS3012/BTS3012AE. The cables consist of the RF RX signal cable and the RF TX signal cable.

Context

The RF TX signal cable is used to transmit the uplink signals between the DDPU/DFCU and the DTRU. The RF RX signal cable is used to transmit the downlink signals between the DDPU/DFCU and the DTRU.

The connectors on both ends of the RF RX signal cable are the SMA elbow male connectors. The connectors on both ends of the RF TX signal cable are the N elbow male connectors.

Procedure

Step 1 Connect the SMA elbow male connector at one end of the RX signal cable to the RX port on the DDPU/DFCU, and fasten the connector.

NOTE

Use a spanner to fasten the connectors of the RF signal cables.

Step 2 Connect the SMA elbow male connector at the other end of the RX signal cable to the RX port on the corresponding DTRU, and fasten the connector.

Step 3 Connect the N elbow male connector at one end of the TX signal cable to the TX port on the DDPU/DFCU and fasten the connector.

Step 4 Connect the N elbow male connector at the other end of the TX signal cable to the TX port on the corresponding DTRU, and fasten the connector.

Step 5 Wedge the extra RF signal cables in the cable trough between the two subracks, and use cable ties to bind the cables evenly.

NOTE

Route the RF signal cables according to the following rules:

- The cables should not block the indicators on the board or module.
- The cabling on one board or module should be performed so that the cables do not block the other boards or modules. The cabling should be convenient for the maintenance on the boards or modules.

----End

9.5.2 Installing the Indoor 1/2-Inch Jumpers of the BTS3012

This task describes how to install the jumpers between the feeder and the BTS3012 cabinet.

Context

The indoor 1/2-inch jumper is used to transmit RF signals. The connectors on both ends of the jumper are the DIN connectors.

CAUTION

The RF jumper must be connected securely to avoid RF signal leakage.

NOTE

Use a torque wrench to fix the DIN connector and tighten the connector to 27 N•m.

Procedure

Step 1 Connect one end of the jumper to the jumper connector on the feeder side.

Step 2 Obtain the jumper of an appropriate length based on the actual cabling route.

Step 3 Attach the label at the point 100 mm away from each connector by referring to **Labeling the Antenna System**.

Step 4 Connect the DIN connector of the jumper to the antenna port on the top of the DDPU or DFCU.

NOTE

Before connecting the jumper, perform the operation described in **Testing the Antenna System**.

----End

9.6 Installing the BTS3012 Signal Cables

This task describes how to install the BTS3012 signal cables.

9.6.1 Installing the Combining Short-Circuiting Signal Cables of the BTS3012/BTS3012AE
This task describes how to install the combining short-circuiting signal cables of the BTS3012/BTS3012AE. The cables are used to realize the combining output of the two-route transmit signals for the DTRU (type A).

9.6.2 Installing the Four-In-One Short-Circuiting Signal Cables of the BTS3012/BTS3012AE
This task describes how to install the four-in-one short-circuiting signal cables of the BTS3012/BTS3012AE. The cables are used for the combining output of four-route transmit signals.

9.6.3 Installing the BTS3012/BTS3012AE Signal Cables Between the DFCB and the DFCU
This task describes how to install the BTS3012/BTS3012AE signal cables between the DFCB and the DFCU. The cables are used to transmit one route of combined RF signals (two-in-one) from the DFCB to the DFCU so that the DFCU can combine six routes of RF signals into one route for transmission.

9.6.4 Installing the BTS3012/BTS3012AE Power Detection Cables
This task describes how to install the BTS3012/BTS3012AE power detection cables. The cables are used to transmit the power detection signals of the DFCU/DFCB. The cables can be classified into forward power detection cables and reverse power detection cables.

9.6.5 Installing the Diversity Receive Short-Circuiting Signal Cables of the BTS3012/BTS3012AE
This task describes how to install the diversity receive short-circuiting signal cables of the BTS3012/BTS3012AE. The cables are used to transfer the diversity receive signals from the antenna system.

9.6.6 Installing the Lightning Protection Failure Alarm Cables of the BTS3012
This task describes how to install the lightning protection failure alarm cables of the BTS3012. The lightning protection failure alarm cables on top of the cabinet are used to transfer the Boolean value signals of the DC lightning arrester on top of the cabinet to the DSAC so that the availability of the lightning arrester is reported to the BTS3012.

9.6.7 Installing the Lightning Protection Failure Alarm Cables for the Combined Cabinets
This task describes how to install the lightning protection failure alarm cables for the combined cabinets. The cables are used to transmit the Boolean value signals between the DC lightning arrester on top of the main cabinet and that on top of the extension cabinet.

9.6.8 Installing the Boolean Input Cables of the BTS3012
This task describes how to install the Boolean input cables of the BTS3012. The cables are used to transmit signals of the operation status of external devices to the BTS3012. Therefore, the BTS3012 can control the external devices through the Boolean input cable.

9.6.9 Installing the Boolean Output Cables of the BTS3012
This task describes how to install the Boolean output cables of the BTS3012. The cables are used to transmit control signals from the BTS3012 to the other devices so that the BTS3012 can control the devices.

9.6.10 Installing the EAC Signal Cables of the BTS3012
This task describes how to install the EAC signal cables of the BTS3012. The cables are used to transmit the Boolean value alarm of the external devices to the BTS3012 so that the BTS3012 can control the devices.

9.6.11 Installing the Dedicated Monitoring Signal Cable of the BTS3012
The dedicated monitoring signal cable provides six-route input of dedicated monitoring signals, including signals from the humidity and temperature sensor, smoke sensor, water sensor, infrared sensor, and door control sensor.

9.6.12 Installing the EMI Signal Cables of the BTS3012
This task describes how to install the EMI signal cables of the BTS3012. The cables are used to transmit signals between the BTS3012 and the environment monitoring instrument (EMI).

9.6.13 Installing the RET Control Signal Cables of the BTS3012
This task describes how to install the RET control signal cables of the BTS3012. The cables are used to transmit signals between the DATU in the cabinet and the Bias-Tee on the top of the cabinet.

9.6.14 Installing the Signal Cables Between the DCTB and the DAFU Subrack for the BTS3012
This task describes how to install the signal cables between the DCTB and the DAFU subrack for the BTS3012. The cables are used to transmit clock signals, in-position signals, and band identification signals to the DDPU/DCOM/DFCU in the DAFU subrack.

9.6.15 Installing the Signal Cables for Combined Cabinets
This task describes how to install the signal cables for combined cabinets. The cables are used to transmit signals between the combined cabinets.

9.6.16 Installing the Signal Cables for Cabinet Groups
This task describes how to install the signal cables for cabinet groups. The cables are used to transmit signals between the main cabinets in two cabinet groups.

9.6.17 Installing the Signal Cables for the Combined Group of the BTS3012 and BTS312
This task describes how to install the signal cables for the combined group of the BTS3012 and BTS312. The cables are used to connect the BTS3012 cabinet group (main group) and the BTS312 cabinet group (extension group).

9.6.1 Installing the Combining Short-Circuiting Signal Cables of the BTS3012/BTS3012AE

This task describes how to install the combining short-circuiting signal cables of the BTS3012/BTS3012AE. The cables are used to realize the combining output of the two-route transmit signals for the DTRU (type A).

Context

The combining short-circuiting signal cable is used only for the internal combining of DTRU (type A). The combining short-circuiting signal cable is not required when the DTRU (type B) is used.

Procedure

Step 1 Determine the number of combining short-circuiting signal cables to be installed based on the configuration of the BTS.

Step 2 Connect the N male connector on one end of the cable to the TX1 or TX2 port on the panel of the DTRU (type A) by referring to **Figure 9-4**. Then connect the SMA male connector on the other end of the cable to the IN1 or IN2 port on the panel of the DTRU (type A).

Figure 9-4 Connecting the combining short-circuiting signal cables (black)

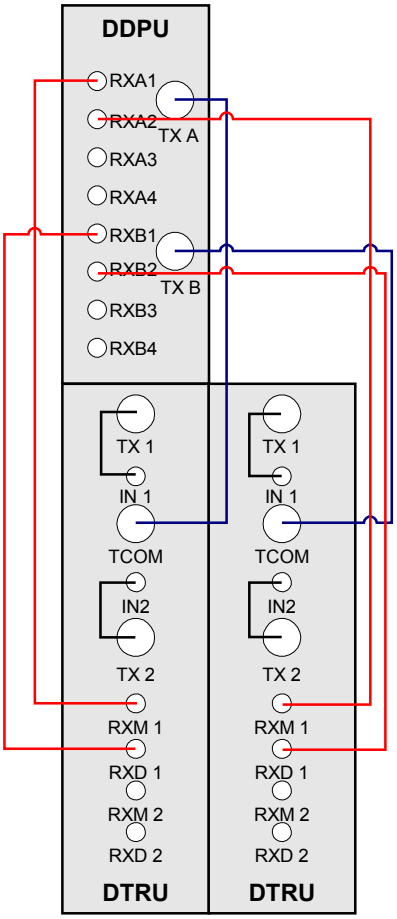

Step 3 Secure the two connectors at the same time.

CAUTION

The two connectors must be secured at the same time so that the cable is not twisted.

----End

9.6.2 Installing the Four-In-One Short-Circuiting Signal Cables of the BTS3012/BTS3012AE

This task describes how to install the four-in-one short-circuiting signal cables of the BTS3012/BTS3012AE. The cables are used for the combining output of four-route transmit signals.

Prerequisite

When the DFCU is configured, the four-in-one short-circuiting signal cables are used for the combining output of transmit signals.

Context

The connectors on both ends of the four-in-one short-circuiting signal cable are the N elbow male connectors.

For the cabling on the front side of the BTS3012 cabinet, refer to **2.2 Cable Distribution of the BTS3012**.

For the cabling on the front side of the BTS3012AE cabinet, refer to **Cable Distribution at the Front of the BTS3012AE Cabinet (AC)**.

Procedure

Step 1 According to the cabling on the front side of the cabinet, connect the N elbow male connector on one end of the signal cable to the COM port on the DFCU. Then fasten the connector.

Step 2 According to the cabling on the front side of the cabinet, connect the N elbow male connector on the other end of the signal cable to the TX-DUP port on the DFCU. Then fasten the connector.

----End

9.6.3 Installing the BTS3012/BTS3012AE Signal Cables Between the DFCB and the DFCU

This task describes how to install the BTS3012/BTS3012AE signal cables between the DFCB and the DFCU. The cables are used to transmit one route of combined RF signals (two-in-one) from the DFCB to the DFCU so that the DFCU can combine six routes of RF signals into one route for transmission.

Context

When the BTS3012/BTS3012AE cabinet is configured with one DFCB, the DFCB is cascaded with the DFCU through the BTS3012/BTS3012AE signal cables between the DFCB and the DFCU.

Procedure

Step 1 Connect the N elbow male connector on one end of the cable to the COM1 or COM2 port on the DFCB.

Step 2 Connect the N elbow male connector on the other end of the cable to the COM-IN port on the DFCU.

----End

9.6.4 Installing the BTS3012/BTS3012AE Power Detection Cables

This task describes how to install the BTS3012/BTS3012AE power detection cables. The cables are used to transmit the power detection signals of the DFCU/DFCB. The cables can be classified into forward power detection cables and reverse power detection cables.

Prerequisite

The BTS3012 uses the power detection cables only when the DFCU/DFCB is configured.

Context

The forward power detection cables have the same appearance as the reverse power detection cables.

The connectors on both ends of the power detection cable are the SMA elbow male connectors.

Procedure

Step 1 Connect the SMA elbow male connector on one end of the forward power detection cable to the PF OUT port on the DFCU, and fasten the connector.

Step 2 Connect the SMA elbow male connector on the other end of the forward power detection cable to the PF in port on the DFCB, and fasten the connector.

Step 3 Connect the SMA elbow male connector on one end of the reverse power detection cable to the PR OUT port on the DFCU, and fasten the connector.

Step 4 Connect the SMA elbow male connector on the other end of the reverse power detection cable to the PR in port on the DFCU, and fasten the connector.

----End

9.6.5 Installing the Diversity Receive Short-Circuiting Signal Cables of the BTS3012/BTS3012AE

This task describes how to install the diversity receive short-circuiting signal cables of the BTS3012/BTS3012AE. The cables are used to transfer the diversity receive signals from the antenna system.

Prerequisite

The BTS3012 uses the diversity receive short-circuiting signal cables only when the DFCU is configured.

Context

The connectors on both ends of the diversity receive short-circuiting signal cable are the SMA elbow male connectors.

For the cabling on the front side of the BTS3012 cabinet, refer to **2.2 Cable Distribution of the BTS3012**.

For the cabling on the front side of the BTS3012AE cabinet, refer to **Cable Distribution at the Front of the BTS3012AE Cabinet (AC)**.

Procedure

Step 1 According to the cabling on the front side of the cabinet, connect the SMA elbow male connector at one end of the diversity receive short-circuiting signal cable to the RXD–OUT port on the DFCU and fasten the connector.

Step 2 According to the cabling on the front side of the cabinet, connect the SMA elbow male connector at the other end of the diversity receive short-circuiting signal cable to the HL–IN port on the DFCU and fasten the connector.

----End

9.6.6 Installing the Lightning Protection Failure Alarm Cables of the BTS3012

This task describes how to install the lightning protection failure alarm cables of the BTS3012. The lightning protection failure alarm cables on top of the cabinet are used to transfer the Boolean value signals of the DC lightning arrester on top of the cabinet to the DSAC so that the availability of the lightning arrester is reported to the BTS3012.

Context

Before the delivery of the cabinet, one end (cord end terminal) of the lightning protection failure alarm cable is fixed in the ALARM and GND cable holes on the lightning arrester. The other end (2PIN•phoenix terminal) should be inserted into the S1+S1- port on the DSAC on site. The lightning protection failure alarm cable for the extension cabinet is connected to the S2+S2- port on the DSAC in the extension cabinet.

Procedure

Step 1 Determine whether the BTS3012 is installed in combined-cabinet mode.

If...	Then...
The BTS3012 is not installed in combined-cabinet mode	Go to **Step 2**.
The BTS3012 is installed in combined-cabinet mode	Go to **Step 3**.

Step 2 Connect the lightning protection failure alarm cable of the BTS3012 to the S1+S1- port on the DSAC.

Step 3 Connect the lightning protection failure alarm cable in the extension cabinet to the S2+S2- port on the DSAC in the extension cabinet.

----End

9.6.7 Installing the Lightning Protection Failure Alarm Cables for the Combined Cabinets

This task describes how to install the lightning protection failure alarm cables for the combined cabinets. The cables are used to transmit the Boolean value signals between the DC lightning arrester on top of the main cabinet and that on top of the extension cabinet.

Prerequisite

- The BTS3012 combined-cabinet connection mode is used on site.
- The lightning protection failure alarm cables of the BTS3012 are installed.

Procedure

Step 1 Obtain the cable of an appropriate length based on the onsite cabling mode.

Step 2 Crimp a connector onto one end of the cable to form a cord end terminal.

Step 3 Use a small screwdriver to remove the delivered Phoenix terminal of the cable from the top of the extension cabinet. Then connect the Phoenix terminal to the other end of the cable.

Step 4 Connect the Phoenix terminal to the S2+S2- port on the DSAC of the main cabinet.

Step 5 Loosen the screws on the alarm port on the power lightning arrester in the extension cabinet. Fasten the cord end terminal.

----End

9.6.8 Installing the Boolean Input Cables of the BTS3012

This task describes how to install the Boolean input cables of the BTS3012. The cables are used to transmit signals of the operation status of external devices to the BTS3012. Therefore, the BTS3012 can control the external devices through the Boolean input cable.

Context

CAUTION

The Boolean input cable can be connected to only the Boolean port on the device in the equipment room. Avoid connecting the Boolean input cable of the outdoor device to the SWIN port on the DMLC on top of the cabinet. Avoid connecting the Boolean input cable for outdoor cabling to the SWIN port on the DMLC on top of the cabinet.

Procedure

Step 1 Route the Boolean input cable of the BTS3012 by referring to **9.2 Cabling Specifications for the BTS**.

Step 2 Make an MD68 male connector at one end of the Boolean input cable.

Step 3 Insert the MD68 male connector into the SWIN port on the DMLC on top of the cabinet.

----End

9.6.9 Installing the Boolean Output Cables of the BTS3012

This task describes how to install the Boolean output cables of the BTS3012. The cables are used to transmit control signals from the BTS3012 to the other devices so that the BTS3012 can control the devices.

Context

CAUTION

The Boolean output cable can be connected to only the Boolean value port on the device in the equipment room. Avoid connecting the Boolean output cable of the outdoor device to the SWOUT port on the DMLC on top of the cabinet. Avoid connecting the Boolean output cable for outdoor cabling to the SWOUT port on the DMLC on top of the cabinet.

Procedure

Step 1 Route the Boolean output cables of the BTS3012 by referring to **9.2 Cabling Specifications for the BTS**.

Step 2 Make a DB15 male connector at one end of the Boolean output cable.

Step 3 Insert the DB15 male connector into the SWOUT port on the DMLC on top of the cabinet.

----End

9.6.10 Installing the EAC Signal Cables of the BTS3012

This task describes how to install the EAC signal cables of the BTS3012. The cables are used to transmit the Boolean value alarm of the external devices to the BTS3012 so that the BTS3012 can control the devices.

Context

CAUTION

The EAC signal cable can be connected to only the Boolean value port on the device in the equipment room. Avoid connecting the Boolean input cable of the outdoor device to the EAC port on the DSAC on top of the cabinet. Avoid connecting the Boolean input cable for outdoor cabling to the EAC port on the DSAC on top of the cabinet.

Procedure

Step 1 Route the EAC signal cables by referring to **9.2 Cabling Specifications for the BTS**.

Step 2 Make a DB26 male connector at one end of the EAC signal cable.

Step 3 Insert the DB26 male connector into the EAC port on the DSAC on top of the cabinet.

Step 4 Insert the DB9 male connector of the EAC signal cable into the DB9 port on the EMU or EAC.

----End

9.6.11 Installing the Dedicated Monitoring Signal Cable of the BTS3012

The dedicated monitoring signal cable provides six-route input of dedicated monitoring signals, including signals from the humidity and temperature sensor, smoke sensor, water sensor, infrared sensor, and door control sensor.

Prerequisite

All the sensors and transmission interface boxes are installed in the equipment room.

Procedure

Step 1 Route the dedicated monitoring signal cable of the BTS3012 by referring to **9.2 Cabling Specifications for the BTS**.

Step 2 Make a DB44 male connector at one end of the dedicated monitoring signal cable of the BTS3012.

Step 3 Insert the DB44 male connector into the AIN port on the DMLC on top of the cabinet.

----End

9.6.12 Installing the EMI Signal Cables of the BTS3012

This task describes how to install the EMI signal cables of the BTS3012. The cables are used to transmit signals between the BTS3012 and the environment monitoring instrument (EMI).

Context

The EMI signal cable only serves as an adapter. On one end of the cable is a DB9 male connector and on the other end is a DB25 female connector.

Procedure

Step 1 Insert the DB9 male connector into the COM1 or COM2 port on the DSAC at the top of the cabinet.

Step 2 Connect the DB25 female connector with the EMI-equipped cable.

----End

9.6.13 Installing the RET Control Signal Cables of the BTS3012

This task describes how to install the RET control signal cables of the BTS3012. The cables are used to transmit signals between the DATU in the cabinet and the Bias-Tee on the top of the cabinet.

Prerequisite

The BTS3012 uses the RET antennas.

Procedure

Step 1 Connect the SMA elbow male connector to the ANT port on the panel of the DATU in the cabinet.

Step 2 On the left of the cabinet, lead the SMA straight male connector to the top of the cabinet from the bottom to the top.

Step 3 Connect the SMA straight male connector to the SMA port on the Bias-Tee at the top of the cabinet.

Step 4 Attach labels to both ends of the RET control signal cable by referring to **Labeling Signal Cables**.

----End

9.6.14 Installing the Signal Cables Between the DCTB and the DAFU Subrack for the BTS3012

This task describes how to install the signal cables between the DCTB and the DAFU subrack for the BTS3012. The cables are used to transmit clock signals, in-position signals, and band identification signals to the DDPU/DCOM/DFCU in the DAFU subrack.

Context

Before the delivery of the cabinet, one end of the signal cable is connected to the backplane of the DCTB.

Procedure

Step 1 Connect the DB26 male connector of the signal cable to the COM port on the DDPU or the DBUS port on the DFCU or the ONSHELL port on the DCOM in the DAFU subrack.

Step 2 Attach a label to the signal cable at the DB26 male connector end by referring to **Labeling Signal Cables**.

----End

9.6.15 Installing the Signal Cables for Combined Cabinets

This task describes how to install the signal cables for combined cabinets. The cables are used to transmit signals between the combined cabinets.

Context

The connectors on both ends of the signal cable are the MD68 male connectors. One end connects to the DCF port on the top of the main cabinet and the other end connects to the DCF port on the top of the extension cabinet.

NOTE

The signal cable for combined cabinets is short. Therefore, overhead cabling is not required.

Procedure

Step 1 Attach labels to both ends of the signal cable by referring to **Labeling Signal Cables**.

Step 2 Connect the MD68 male connector on one end of the cable to the DCF port on the top of the main cabinet.

Step 3 Connect the MD68 male connector on the other end to the DCF port on the top of the extension cabinet.

----End

9.6.16 Installing the Signal Cables for Cabinet Groups

This task describes how to install the signal cables for cabinet groups. The cables are used to transmit signals between the main cabinets in two cabinet groups.

Context

The connectors on both ends of the signal cable are the MD36 male connectors. One end connects to the CKB1 or CKB2 port on the top of the main cabinet in the main group. The other end connects to the CKB1 or CKB2 port on the top of the main cabinet in the extension group.

Procedure

Step 1 Attach labels to both ends of the signal cable by referring to **Labeling Signal Cables**.

Step 2 Connect the MD36 male connector on one end of the cable to the CKB1 or CKB2 port on the top of the main cabinet in the main group.

Step 3 Connect the MD36 male connector on the other end to the CKB1 or CKB2 port on the top of the main cabinet in the extension group.

----End

9.6.17 Installing the Signal Cables for the Combined Group of the BTS3012 and BTS312

This task describes how to install the signal cables for the combined group of the BTS3012 and BTS312. The cables are used to connect the BTS3012 cabinet group (main group) and the BTS312 cabinet group (extension group).

Context

On one end of the signal cable is an MD36 male connector and on the other end is an MD25 male connector.

Procedure

- Form a combined group of one BTS3012 cabinet and one BTS312 cabinet.
  1. Attach labels to both ends of the signal cable by referring to **Labeling Signal Cables**.
  2. Connect the MD36 male connector on one end of the cable to the CKB1 or CKB2 port on the top of the BTS3012 cabinet.
  3. Connect the MD25 male connector on the other end of the cable to the CKB1 or CKB2 port on the top of the BTS312 cabinet.
- Form a combined group of one BTS3012 cabinet and two BTS312 cabinets.

  NOTE

  The following assumes that one BTS312 cabinet is on the left of the BTS3012 cabinet and the other BTS312 cabinet is on the right of the BTS3012 cabinet.

  1. Attach labels to both ends of the signal cable by referring to **Labeling Signal Cables**.
  2. Connect the MD36 male connector on one end of the cable to the CKB1 port on the top of the BTS3012 cabinet. Connect the DB25 male connector on the other end to the CKB1 port on the top of the BTS312 cabinet on the right of the BTS3012 cabinet.
  3. Connect the MD36 male connector on one end of another cable to the CKB2 port on the top of the BTS3012 cabinet. Connect the DB25 male connector on the other end to the CKB2 port on the top of the BTS312 cabinet on the left of the BTS3012 cabinet.

----End

9.7 Installing the Cables Between the Sidepower and the BTS3012

This task describes how to install the alarm cable and the power cable between the Sidepower and the BTS3012.

9.7.1 Installing the Power Cables Between the Sidepower and the BTS3012
This task describes how to install the power cable between the Sidepower and the BTS3012.

9.7.2 Installing the Alarm Cables Between the Sidepower and the BTS3012
This task describes how to install the alarm cable between the Sidepower and the BTS3012.

9.7.1 Installing the Power Cables Between the Sidepower and the BTS3012

This task describes how to install the power cable between the Sidepower and the BTS3012.

Procedure

Step 1 Connect one end of the blue wire to the output positive copper bar of the Sidepower and the other end to the GND terminal of the lightning protection filtering box on top of the BTS3012 cabinet.

Step 2 Connect one end of the black wire to the output negative copper bar of the Sidepower and the other end to the -48 V terminal of the lightning protection filtering box on top of the BTS3012 cabinet.

Step 3 Attach labels to the power cable by referring to **Labeling Power Cables**.

----End

9.7.2 Installing the Alarm Cables Between the Sidepower and the BTS3012

This task describes how to install the alarm cable between the Sidepower and the BTS3012.

Procedure

Step 1 Insert the DB26 male connector on one end of the alarm cable into the EAC port on the DSAC at the top of the BTS3012 cabinet.

Step 2 Insert the DB9 male connector on the other end of the alarm cable into the DB9 female connector on the alarm board of the Sidepower.

Step 3 Attach labels to the alarm cable by referring to **Labeling Signal Cables**.

----End

9.8 Installing the Cables Between the EMU and the BTS3012

This task describes how to install the alarm cable between the EMU and the BTS3012.

9.8.1 Installing the Signal Cables of the External Environment Alarm Box Between the EMU and the BTS3012
This task describes how to install the signal cable of the external environment alarm box between the EMU and the BTS3012.

9.8.1 Installing the Signal Cables of the External Environment Alarm Box Between the EMU and the BTS3012

This task describes how to install the signal cable of the external environment alarm box between the EMU and the BTS3012.

Procedure

Step 1 Connect the DB9 male connector on one end of the signal cable to the RS458 port on the EMU.

Step 2 Connect the DB9 male connector on the other end of the signal cable to the COM1 and COM2 ports on the DSAC at the top of the BTS3012 cabinet.

Step 3 Attach labels to the signal cable by referring to **Labeling Signal Cables**.

----End

9.9 Installing the Cables Between the EAC-2 and the BTS3012

This task describes how to install the cables between the EAC-2 and the BTS3012.

9.9.1 Installing the Signal Cables of the External Environment Alarm Box Between the EAC-2 and the BTS3012
This task describes how to install the signal cable of the external environment alarm box between the EAC-2 and the BTS3012.

9.9.1 Installing the Signal Cables of the External Environment Alarm Box Between the EAC-2 and the BTS3012

This task describes how to install the signal cable of the external environment alarm box between the EAC-2 and the BTS3012.

Procedure

Step 1 Connect the DB9 male connector on one end of the signal cable to the RS458 port on the EAC-2.

Step 2 Connect the DB9 male connector on the other end of the signal cable to the COM1 and COM2 ports on the DSAC at the top of the BTS3012 cabinet.

Step 3 Attach labels to the signal cable by referring to **Labeling Signal Cables**.

----End